Instruction Manual

Mark VII AquaSpray™ Self-Serve

Mark VII Equipment Inc.
5981 Tennyson Street
Arvada, Colorado 80003
Tel (303) 423-4910
Fax (303) 430-0139
www.markvii.net

Part number 6370-0550 Revision A October 2007

Part number 6370-0550 Revision A October 2007

Table of Contents

List of Figures

Preface

The Mark VII Equipment AquaSpray™ self-serve car wash system is designed by operators for operators. Our engineers employ state-of-the-art design and modeling tools with self-serve owners reviewing the results at every step. AquaSpray™ offers more standard features than any other comparably priced unit. The wide range of functions and options, unsurpassed uptime and dependability, and attractive and easy to use in-bay packages are all designed to maximize profit. The AquaSpray™ offers operators and investors ease of service in a compact stacked configuration package designed to fit their needs.

Introduction

This manual's objective is to provide information regarding the AquaSpray™ Self-service system, installation and start-up. Other unique information about this product is also a part of the manual.

The content of this manual is specifically about the AquaSpray™ Fluid Module and the AquaSpray™ Pumping Plant. Other equipment, accessories, or parts, which accompany the use of this system, will be mentioned as necessary.

Parts lists for the AquaSpray™ Compact are available separately from this manual.

Safety warnings:

Injection Hazard:

Equipment can cause serious injury if the spray penetrates the skin. Do not point the gun at anyone or any part of the body. In case of penetration seek medical aid immediately.

This system is capable of producing 10,342 kpa (1500 psi). To avoid rupture and injury, do not operate this pump with components rated less than 10,342 kpa (1500 psi) working pressure (including but not limited to spray guns, hose, and hose connections).
Before servicing, cleaning, or removal of any part, shut off power and relieve pressure.

Warning: do not spray electrical apparatus and wiring.

Specifications and Features

Standard Features and Equipment

- ALL Stainless Frame;
- Slide-out Pumping Plant and LP Modules;
- Fluid Module Base Unit with 4 chemicals, expandable up to 8 chemicals;
- Base Unit with Main Water Tank;
- CAT 2120W High Pressure Pumping Plants;
- 8 Position Large Rotary Coin Box;
- Slugbuster III Coin Acceptor;
- Accutime Rotary Timer;
- Standard Safe;
- 180 and 360° booms;
- High Pressure Rinse;
- High Pressure Soap;
- High Pressure Wax;
- Low Pressure Presoak;
- Low Pressure Tire Cleaner;

Optional Features and Equipment

- Spotfree Rinse;
- RO Boost Pump;
- High Pressure Temperature Selectable Rinse;
- Wheel Cleaner Module;
- Bug Cleaner Module;
- Glass Cleaner Module;
- Bubble Brush Module (Standard or Triple Foam);
- Antifreeze Injection Module;

- Foaming Conditioner Module (Standard or Triple Foam);
- 5 HP Motor Upgrade;
- CAT 530 Upgrade;
- 12 Position Large Coin Box;
- IDX MA800 Coin Acceptor;
- IDX X10 Coin Acceptor;
- Microcoin Coin Acceptor;
- Dixmore Count Down Timer;
- Dixmore Bay Timer DX300;
- Dixmore Ultimate Timer DX2000;
- Coin Box Heater;
- Large Safe;
- Extra Large Safe;
- Coin Box Heater;
- 360° Dual Boom;
- Additional Signage;

Specifications

Figure 01, AquaSpray™ Dimensions

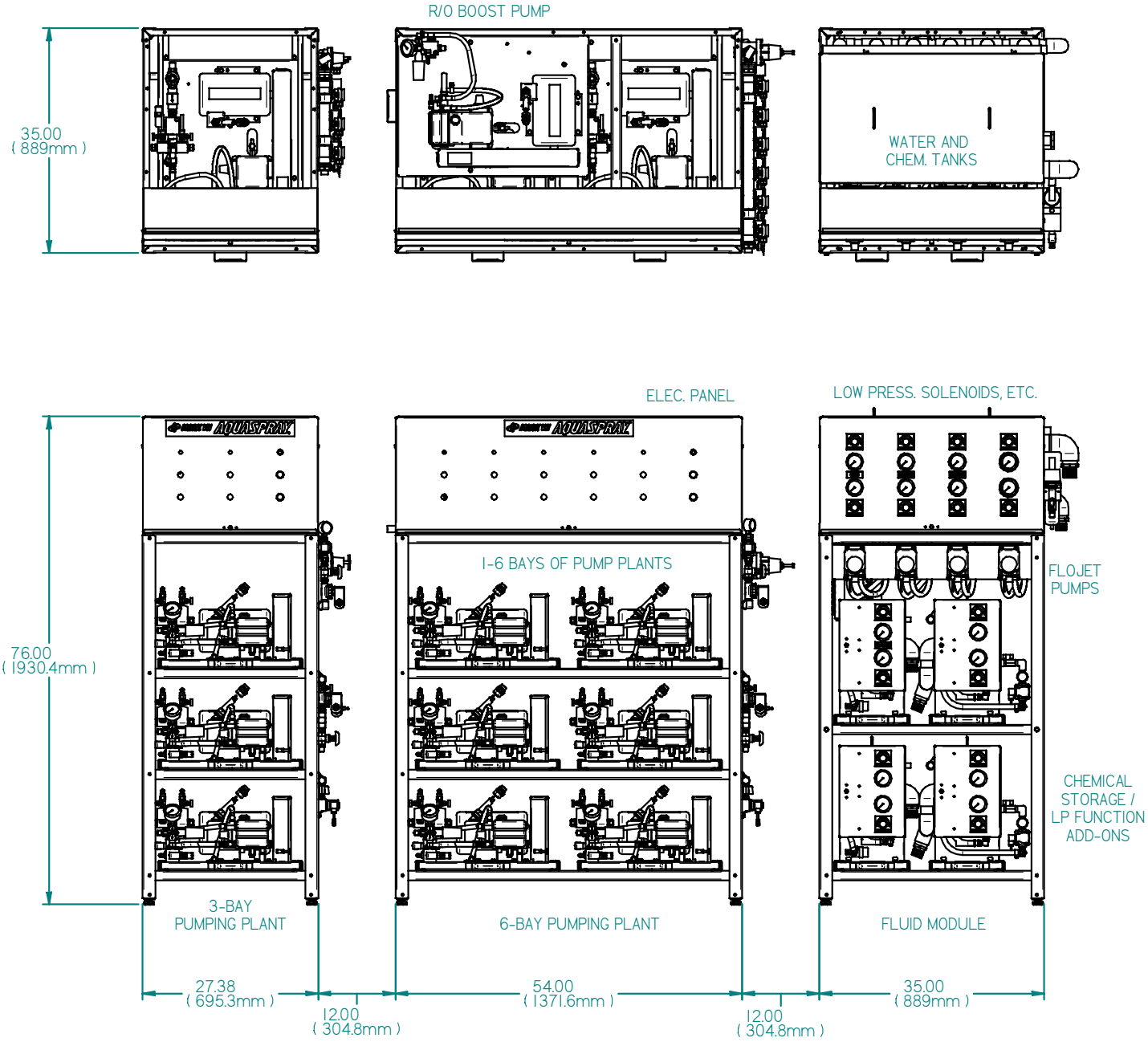

AquaSpray™ Compact Dimensions

	Pumping plant, 3-Bay	Pumping plant, 6-Bay	Fluid module, Base Unit
Height	76" / [193 cm]	76" / [193 cm]	76” / [193 cm]
Width	27.4" / [69 cm]	54" / [137 cm]	35” / [89 cm]
Depth	35" / [89 cm]	35" / [89 cm]	35” / [89 cm]
Weight			

Note:These dimensions do not include work spaces, in the front and side of the units. Proper access and work spaces should be provided as needed.

Electrical

Domestic	208-230 VAC 60 Hz 3 Phase, 3 HP Motors: 9 amp / bay, plus ancillary demand 5 HP Motors: 14 amp / bay, plus ancillary demand

Air and Water

Minimum Water feed pressure	25 pounds per square inch (psi) [1.7 bar] Flowing
Maximum Water feed pressure	85 pounds per square inch (psi) [5.9 bar]
Water demand	For 2120 pumps; 3.5 gpm per bay, plus ancillary demand
	For 530 pumps; 4.5 gpm per bay, plus ancillary demand
Air supply	½” line with 60 psi minimum [4.1 bar], 100 psi maximum [6.9 bar]
Air consumption demand	Approximately 1 ½ cubic feet per minute (cfm) [42 liters/minute], per bay @ 40 psi

Note: Water demand refers to water supply at the machine’s connection location. Water supply to the building has to be sufficient to provide such demand. Ancillary demand is the total of all other systems that have water requirement, i.e R/O systems, bathrooms, etc.

Leave adequate space, recommended 12”, between Fluid Module and Pumping Plants, or between each Pumping Plant, if applicable.

Equipment and Operation

The AquaSpray™ combines the low pressure and chemical equipment together and keeps the high-pressure functions in the same station.

Figure 02, AquaSpray™ system

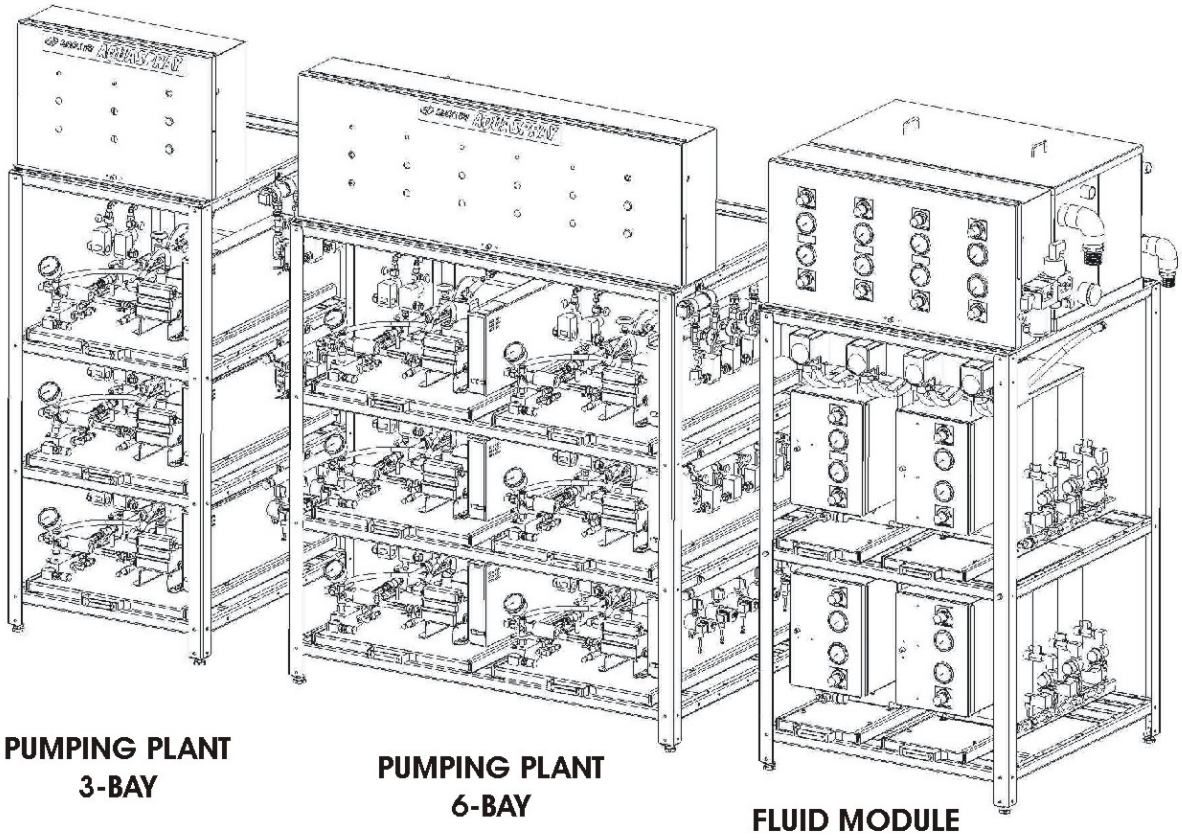

Fluid Module

The Fluid Module is the station where the different water supplies and chemicals are handled. This provides for the mixing of the chemical solutions at variable rates and the pumping of all low-pressure products. The incoming city water, hot water, and spot-free are also connected here and distributed to the pumping plants as requested. The main weep manifold/controls is also located here. Figure 03 shows the locations of each of these systems.

Figure 03, Fluid Module

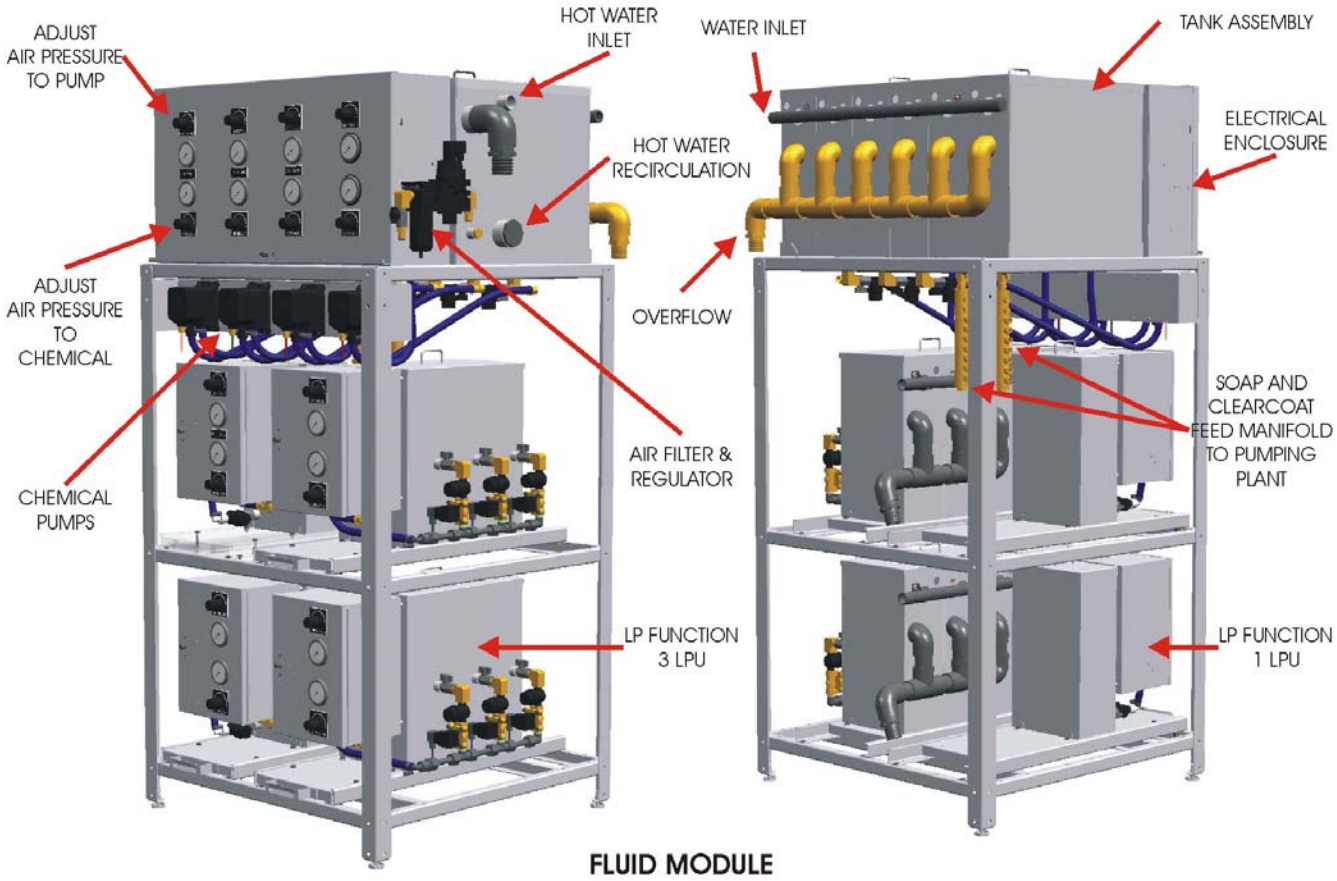

Cold Rinse

The cold rinse manifold is a pressurized manifold fed directly from the city supply. There is a regulator on this manifold to provide consistent feed pressure to the pumps. This pressure should be set to 25-45 psi for proper operation. This is used for Cold Water Rinse only.

Hot Water

The hot water for the system is fed to the pumps from the hot water storage tank on the fluid module. The tank can be fed with pressurized hot water or

recirculated with a boiler. This water will be used for all hi-pressure chemicals (soap and wax), and is selectable for rinse by the operator.

This is a flooded suction feed to the hi-pressure pumps. In order to maintain consistent chemical draw this feed must be throttled to create a slight vacuum on the hi-pressure pumps. This is explained further in the start-up procedures.

Chemical Mixing

The chemical mixing for all products is done in the same way. The only difference is whether the products would be used with hi-pressure (soap and wax), or with low-pressure (tire, presoak, bubble brush, etc.). The hi-pressure products are diluted, for the second time, while being drawn by the hi-pressure pumps. The low-pressure products are sent directly to the bays.

Water is controlled by a proportioner (Hydrominder), which controls the water level and draws the chemical from the storage containers with a venturi injector. The dilution ratios are determined by the orifice size that is installed in the venturi injector. Refer to the orifice chart along with the chemical manufacturer's recommendations on starting dilutions for specific products.

Low-Pressure Product distribution

Each of the low-pressure products is handled in the same manner. The only difference is the set-up of the usage rates and operating pressures. There are two air regulators for each system. One controls the air pressure for the air driven chemical pump and the other controls the pressure for the air injected to create the desired foaming effect. Each product is controlled independently to allow for maximum flexibility in creating the desire effect with various products.

The air driven pump takes diluted solutions from the mixing tank and delivers it to the corresponding chemical manifold. Manifold style solenoid valves then control the delivery of each product to the individual bay. The pressure adjustment made at the regulator controls the entire system while the flow adjustment at each solenoid valve controls each bay. The air mixing system is set up identically with the exception of the tank and pump. These valves can be easily identified, the chemical valves are stainless steel and the air valves are brass. Each valve can be rebuilt without having to replace the entire manifold.

Pumping Plant

Hi-pressure Pumping

Each bay has an individual hi-pressure pump station that is mounted on a common frame. Arrays of the electrical control panels are located in a electrical enclosure atop the pumping plant frame. Each individual electrical panel controls each pump station. This allows for continued operation of the system in the event that a single bay needs to be shut down for service or to make repairs.

The hi-pressure pump has an inlet manifold that provides the point of injection of diluted chemistry and the switching of water supplies (hot / cold). There are check valves installed to prevent reverse flow and cross contamination of water/chemical at the inlet manifold. The system, by default, pulls water from the hot water storage tank. When cold rinse is selected a solenoid valve opens and pressurizes the pump inlet forcing the pump to draw cold water.

There are two types of AquaSpray™ pumping plants; the 3-Bay and the 6-Bay. The 3-Bay pumping plant can accommodate up to three wash bays, or two wash bays and an R/O boost pump. The 6-bay pumping plant can hold up to 6 pump modules and an extra space for the R/O Boost pump on the top of the pumping plant frame.

Figure 04, Pumping Plants, 3-Bay and 6-Bay

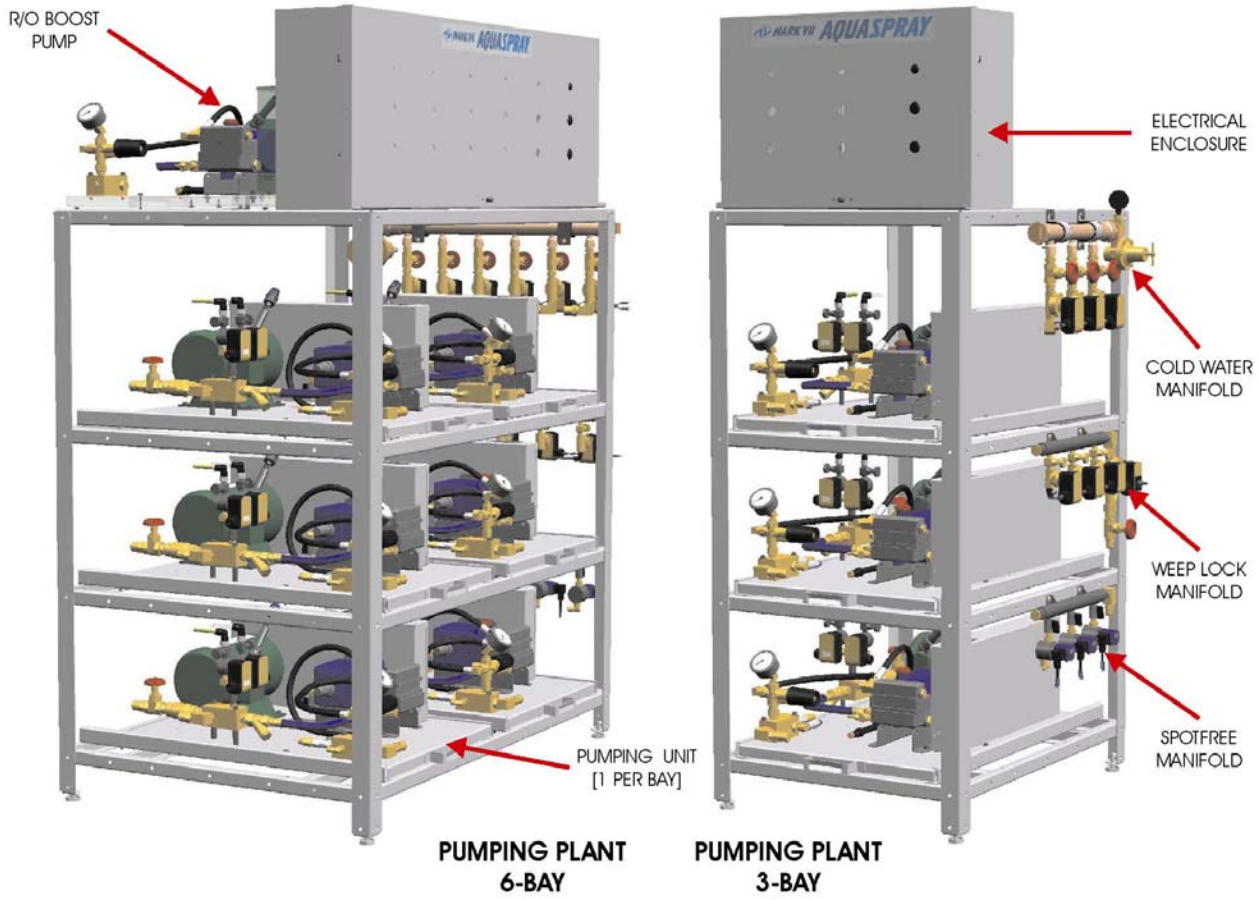

The soap and wax solutions are drawn into the inlet manifold by throttling the hot water feed to create a slight vacuum at the manifold. Specific procedures to set this are in the start-up section. When a chemical function is selected the corresponding solenoid valve is energized and allows the product to be drawn into the inlet manifold. The product has to be pumped from the pump station to the trigger gun before the consumer will see the product; this is referred to as change over time. The change over time is influenced by the length of the hose to the bay, the size of the hose, and the pump pressure.

There are individual needle valve adjustments on each product to adjust the chemical flow for each bay. This allows adjustment for individual operator performance requirements and specific chemical titrations.

The outlet of each pump delivers to a hi-pressure manifold that serves as a connection point for several systems. The weep, spot-free, and unloader are all connected at this point. This is also the connection point for the hi-pressure line going to the bay.

The unloader is the adjustment for the amount of pressure delivered to the bay. The pressure is a result of the pump flow versus the nozzle restriction. The unloader is merely a bypass device that allows water to be returned to the pump inlet once the desired pressure is achieved. Once set, this should not require adjustment on a regular basis. If the operating pressure changes focus should be on the water flow or the nozzle restriction. These would likely be causes of pressure changes.

Some pump unit also includes a pressure relief valve installed to protect the system in the event of catastrophic failure of other components. This will discharge the water to atmosphere in event of a dead head situation preventing pump damage or personal harm. If this relief is discharging water immediate action should be taken to correct the cause to prevent further failure.

The pulsing action from the pump is absorbed by a pulsation dampening hose, which connects directly to the pump. This hose provides for a smoother feeling at the trigger gun and reduces wear on other system components.

Weep System

The weep system is connected to each bay at the hi-pressure manifold. There is a check valve to prevent hi-pressure reverse flow back into the weep system. The weep manifold is located on side of the pumping frame. There is a common N/O valve that supplies the weep system with water. This valve is controlled by a thermostat or other controller, which monitors the outside temperature and determines when weep is required. In the event that a manual weep system was ordered, the solenoid valve is replaced with a manual valve that is controlled by the operator.

On the weep manifold there is a needle valve to control the flow rate to each bay. This should be set up at installation to 32 ounces per minute as measured at the trigger gun with the trigger released. This will insure adequate flow to prevent freezing, without wasting water. There is also a weep lock valve for each bay that is energized during low-pressure functions to prevent the weep water from diluting the specific product. This eliminates having to make set-up changes for winter operation.

Note: All solenoid valves pertaining to the weep system are N/O (normally open). This provides added safety in the event of power loss during a winter storm. If the system looses power, all bays will begin to weep in a full on cycle.

See the specific instructions for programming your weep controller that come with the controller.

Electrical System

There is a common electrical enclosure that provides the electrical controls/connections for all the bays. This is the termination point for incoming power and control wiring between the equipment room components and the bay itself. On Mark VII designed equipment each bay has its own independent electrical components. The controls are all 24 VAC supplied by individual transformers. This transformer also supplies the power for the in-bay control box.

Mark VII utilizes a floating electrical system for it low voltage controls. This means that all controls reference a neutral (common) connection that is generated by the transformer. None of the controls reference earth ground. This is important to know in troubleshooting so when you are checking for voltage presence, be sure to check to the common for that bay and not ground. This also provides an added safety in the event that a wiring mistake is made and high voltage is introduced to the control system component damage will not occur.

Note: For safety reasons always make sure the primary power is turned off and check for voltage presence before performing repairs to the control system. Be sure to practice appropriate lock out/tag out procedures.

Bay Equipment

The AquaSpray™ system can be used with current Mark VII Self-serve equipment. Typical components include:

High Pressure Boom for trigger gun;

Low Pressure Boom for Bubble Brush;

Foaming Conditioner applicator gun;

Coin Box for System activation

Other Equipment

Suggested list of ancillary equipment for the system:

Water Heater;

Water Softener;

R/O Unit and Storage tank;

Air compressor;

Gas, electrical power and other public utilities.

Installation

Read through the instructions to determine what tools and fittings will be needed to install the equipment.

The installation of the AquaSpray™ will focus on the Fluid Module, Pumping Plants, and some wash bay equipment. The operator should make sure that other supply system such as hot water, R/O system, air compressor, and public utility supplies, are installed.

Bay requirements

Bay floors

Be sure to slope your floors for good drainage. Your floors may include snow melting/de-icing system or floor heating system. If so, follow the manufacturer's installation instructions.

Drains and traps

Must be of adequate size and comply with local codes.

Utilities

Adequate utilities must be provided for the car wash equipment as well as lighting and heating. Equipment must be protected from freezing (see equipment specifications for requirements).

Underground conduits

Must be placed prior to pouring the concrete for such items as vacuums, exterior light poles, etc.

Overhead Booms

Boom mounting brackets must be provided to facilitate installation of the booms at later time. A sturdy box section of either 1-1/2" angle iron or trussing should be affixed to the roof section capable of holding 400 lbs. minimum.

Coin boxes and safe

Normally, the coin boxes are built into the wall structures. They should be located within two feet of the end of the wall for security purposes. A 1-1/4" conduit must be run from the top of the coin box to the top of the wall in order to facilitate wiring at the later time.

Equipment room requirements

Equipment room

Must be large enough to accommodate all of the required car wash equipment and space for chemical storage, plus a work area, if desired. The equipment room door should be at least 3 ft. wide.

Bill changers

Opening(s) must be provided in the equipment room wall for each bill changer. The dimensions and installation instructions for the bill changer are listed in the manufacturer's manual. The bottom of the opening should be 30" above the paving grade. Allow enough room for the bill changer door to open Locate an electrical outlet near the bill changer for proper operation (see electrical detail).

Utilities

Adequate utilities must be provided for the car wash equipment as well as lighting and heating. Equipment must be protected from freezing.

Venting

All appliances must be properly vented in compliance with local codes.

Drains

The water softener control valve(s) must be connected to the drain (floor or standpipe). Be sure to drain your equipment room well. A good rule of thumb is to include enough drainage to accommodate twice the water supply, without significant build up.

Note: Local codes dictate proper connections to drains. Maintain proper air gap and backflow protection.

Installing the AquaSpray™ Fluid Module

Place the fluid module in the equipment room as indicated on the layout drawings. It should be placed to minimize plumbing runs from the water softener and water heater. Because the incoming connections for the fluid module are mainly on the right side of the unit, the source of the incoming water should be on its right side. Pumping stations are recommended to be located to the left of the fluid module, approximately 12” apart.

Figure 05, Fluid Module Installation

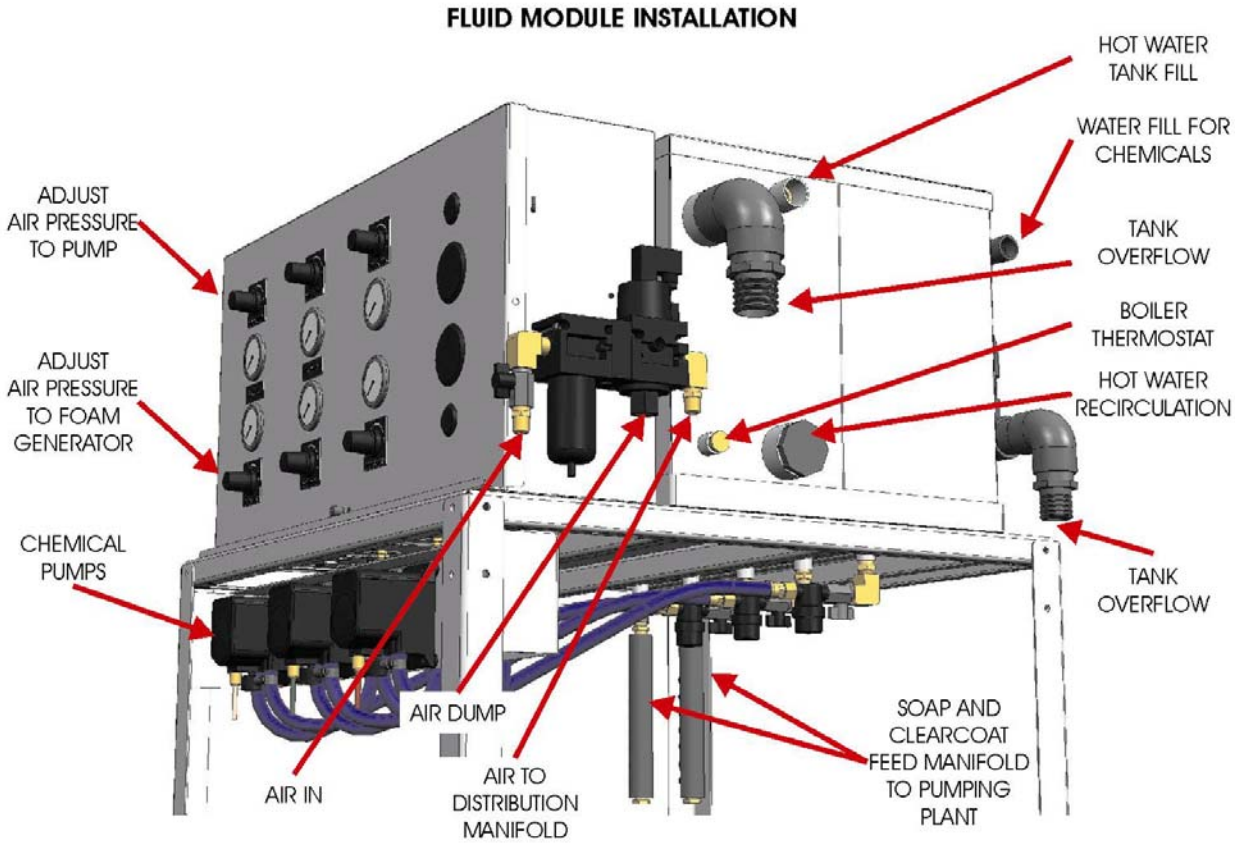

Pumps on the fluid module supply low-pressure chemical mixtures to the bays. Low-pressure manifolds, pumps, and chemical tanks are factory pre-plumbed. High-pressure applications are plumbed directly from the tanks on the fluid module to the pump stations, and are done by the installer.

Connecting High Pressure Chemical Manifolds

Mixing compartments for high-pressure soap and clearcoat are located at sections 1 and 2 of the tank assembly. These compartments have distribution manifolds attached from below the compartments.

Feed lines for the high-pressure chemical are connected from the soap/clearcoat manifolds on the fluid module to the individual solenoid valves

on the pumping plants. Typically the clearcoat line is natural color, and the soap is yellow. The connection is made with a pushlock type fitting.

Figure 06, Fluid Module Tank – Chemicals

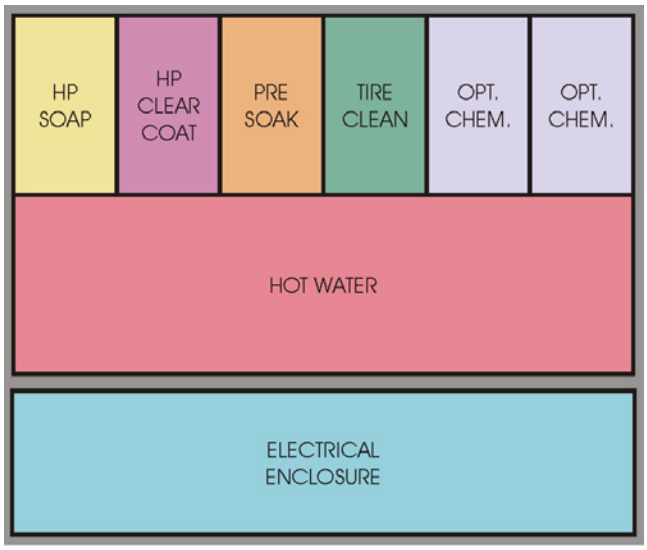

TOP VIEW DIAGRAM, FLUID MODULE

Connecting the low pressure lines from the fluid module

The low-pressure solenoid manifold assemblies are located in the fluid module enclosure. There is one manifold for each low-pressure function. Each assembly contains one block of air solenoids and one block of liquid solenoids. These assemblies distribute air and chemical to each bay.

Use the supplied polyflow tubing to run both the air and liquid lines from each solenoid to the foam generator at its bay. Measure the length of each run and cut the tubing cleanly, as a tapered or ragged cut can interfere with a proper seal. Assignment of the polyflow colors for both air and fluid is listed in figure 06.

Figure 07, Chemical – Polyflow Color assignment

Chemical	Tubing Color
Tire Cleaner	Green
Wheel Cleaner	Black
Presoak	Orange
High Pressure Soap	Yellow
Bug Cleaner	Purple
Triple foam, or Bubble Brush	Red
Tri-Color, or foaming Conditioner	Blue
Clearcoat	Natural
Glass Cleaner	Gray
Anti-freeze	Green

Figure 08, Fluid Module Installation, Electrical Enclosure

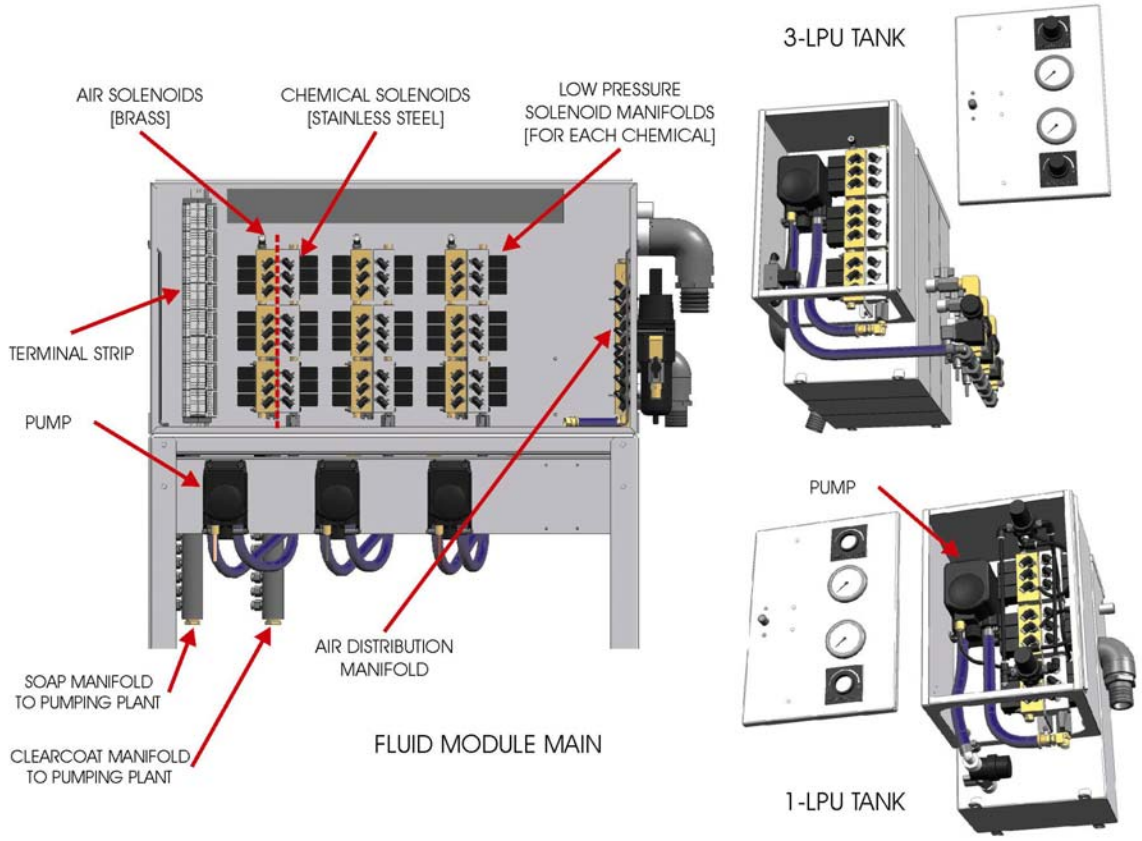

Electrical Connections

Connections between the fluid module and the pump stations are made with the supplied 18-gauge, 15-conductor cable. Cut the cable to the required length for each bay and run the cable from the pumping plant enclosure to the fluid module enclosure using the supplied strain reliefs. Connect the individual conductors to the terminal strip on the electrical panel and to the terminal strip in the fluid module enclosure for the appropriate bay.

To connect the coin box to the pump station, use the 19-conductor cable (P/N 0046-0502), which is supplied in an uncut length. Run one length of cable between the coin box and each electrical panel. The wiring diagram shows which connections to make and all the necessary hardware is supplied.

Connect the appropriate incoming power to each pumping plant as per the included wiring diagram.

Installing High Pressure Pumping Plants

Figure 09, Pumping plant installation

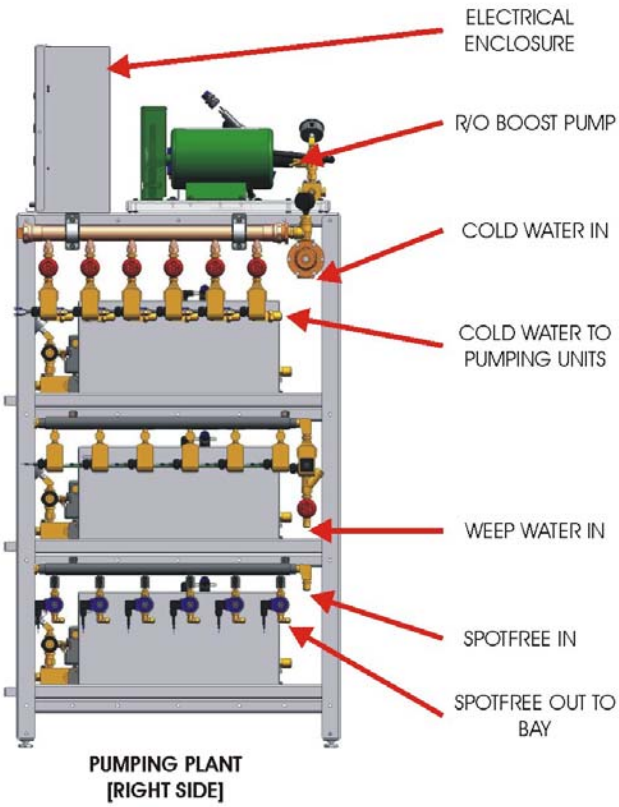

Connecting the manifold for cold water supply

If the pumping plant is equipped with the cold water rinse option, the cold water manifold will need to be supplied with water at 25-85 psi. and sufficient flow rate (see specification).

Connection the manifold for spot free water supply

If the unit is equipped with the spot free boost pump option, spot free water must be supplied directly to the pump inlet at 60 psi. or less. If the water supply is a storage tank, the water level in the tank can be no more than 10' below the pump head. Output from the pump is pre-plumbed to the manifold.

If the unit is not equipped with the spot free boost pump option, spot free water must be supplied to the manifold at 40-1200 psi.

Connecting the manifold for weep water supply

If the pumping plant is equipped with the weep option for the high pressure gun, the weep water manifold will need to be supplied with water at 25-85 psi, with sufficient flow rate (approximately 32 oz. Per minute per bay).

Figure 10, Pumping plant installation, Pump Unit

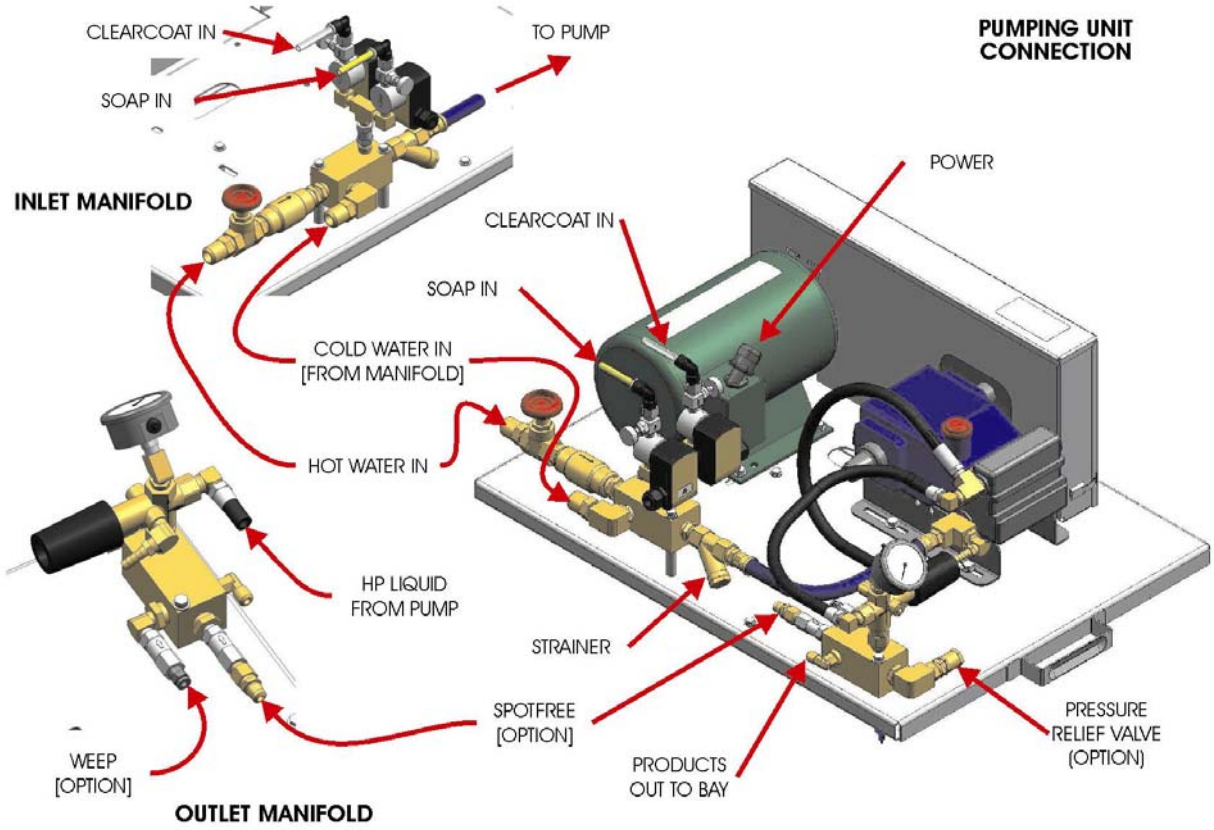

Installing the Wash Bay Equipment

Equipment installation

All coin boxes

A 1-1/4” conduit must be run from each wall above the coin boxes, single or double face, to each of the control panels on the AquaSpray™ pumping plant. Low voltage wire is provided by Mark VII Equipment to run in the conduit.

All control panels

Strip the coin box cable and install each wire color for color (1 thru 12) on the vertical terminal strip. The use of crimp-on type connectors is recommended for the ease of service and neatness.

360° Dual Booms

Figure 11, 360° Dual Boom

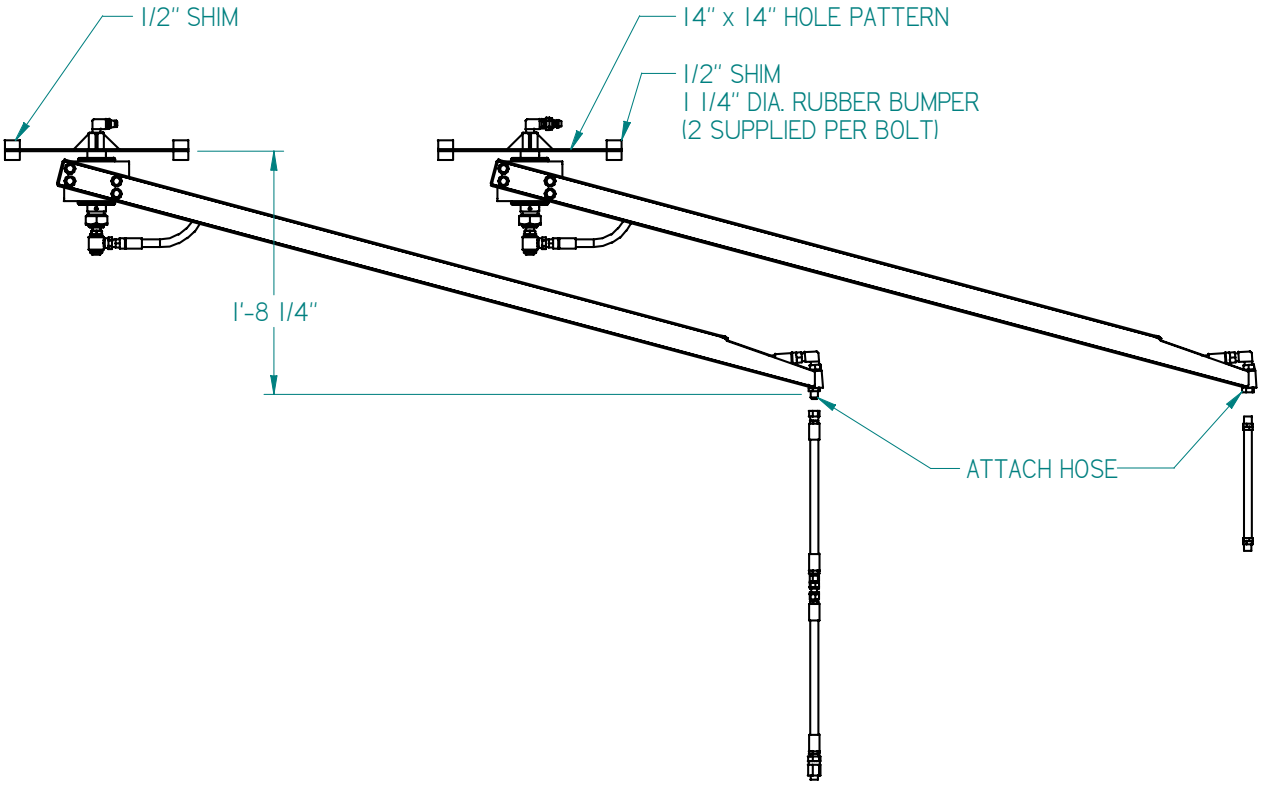

Reference drawing number 7030-2574

Step 1: Find the center of the bay, front to back and side to side. Locate the roof structure closest to this mark. The booms will be fastened to the structure, in 14" x14 " square pattern, using ½" bolts. Refer to the illustration for placement of the double booms: Use ½" fender washers (not supplied) to shim the outside mounting holes. That is the two left side holes on one boom and the right side holes on the other. This way the booms will swing to the outside of the bay by themselves. If only one boom is used, center it in the bay.

NOTE

There is some flexibility built in. If any change is made from the recommended placement, be sure to check all clearances before locking the bolts.

Step 2: Attach the hoses to either the high-pressure wand or the brush.

When installing dual booms, note the location of the in-bay coin box. The high-pressure boom should always be mounted closest to the coin box and the gun should be placed at rest within an arm's reach of the box. The bubble brush should be the furthest boom from the coin box and should hang at rest on the opposite corner of the bay from the high-pressure gun (see figure 08).

Figure 12, Dual boom mounting

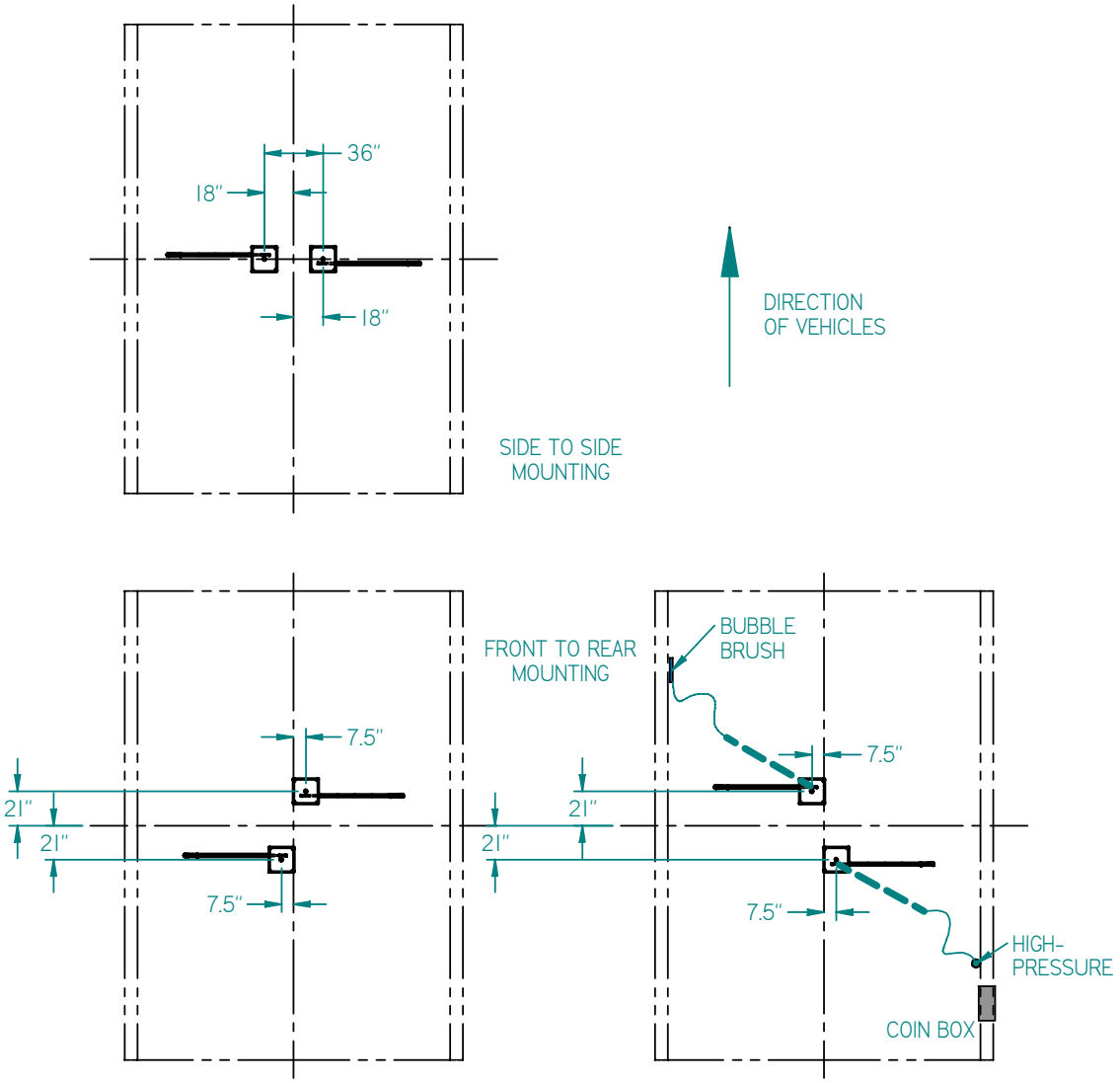

180° Bubble Brush Boom

Figure 13, 180° Bubble Brush Boom

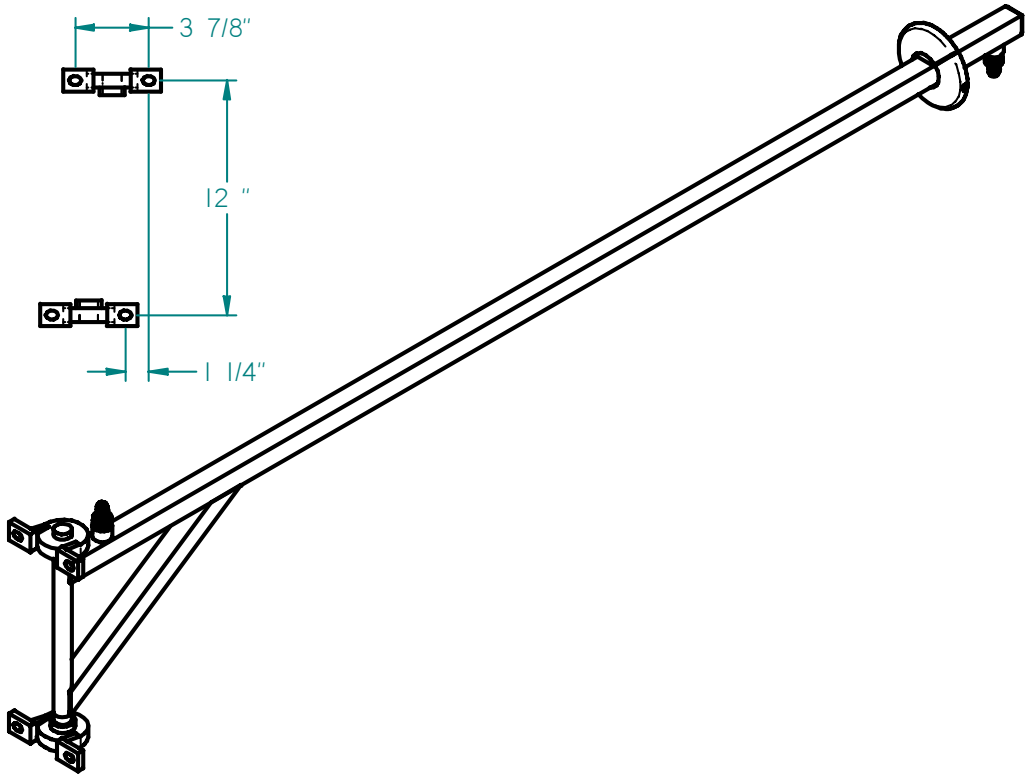

Install the boom on the wall opposite the coin box to avoid interference with the high-pressure wand. The boom should be mounted so that it swings “home” when not in use. It should also be allowed to drain out. To help with this, use the bolt pattern illustrated. It is also recommended that 3/16” spacers or washers are used at the bottom bearing.

Installing Foam Generator for the wand

Figure 14, Foam Generator

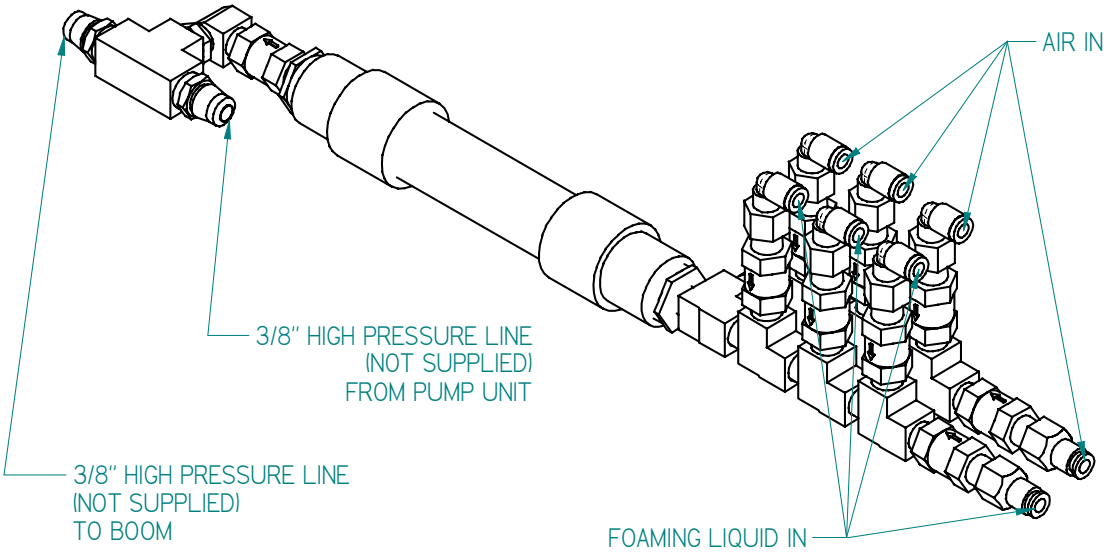

Reference drawing number 7030-2564

This illustration is a foam generator set up for four foaming fluid options. Different manifolds are available according to the options (more or fewer). There should be one assembly per bay. Each assembly is approximately 2' long and is mounted in a chase running above the ceiling and as close to the boom as possible. The chase should be of a corrosion resistant material such as PVC and may range from 6" to 10" in diameter, as it needs to hold all the fluid and air lines as well.

Step 1. Measure the length of run between the pump and the foam generator and between the foam generator and the boom. Purchase enough 3/8" high-pressure hose with female 45° flare fittings for both runs.

Step 2. Bring the ¼" air and foaming fluid tubing lines through the chase from the equipment room. Cut to length and push into the self-locking fittings shown. Be careful to insure that the ends are very straight as tapered or ragged cuts can cause a failure of the seal.

Step 3. Bring the 3/8" high-pressure line from the pump to the foam generator. Connect where shown. Use a shorter high-pressure hose to connect the foam generator and the top of the boom.

Installing the Bubble Brush Foam Generator

Figure 15, Bubble Brush Foam Generator

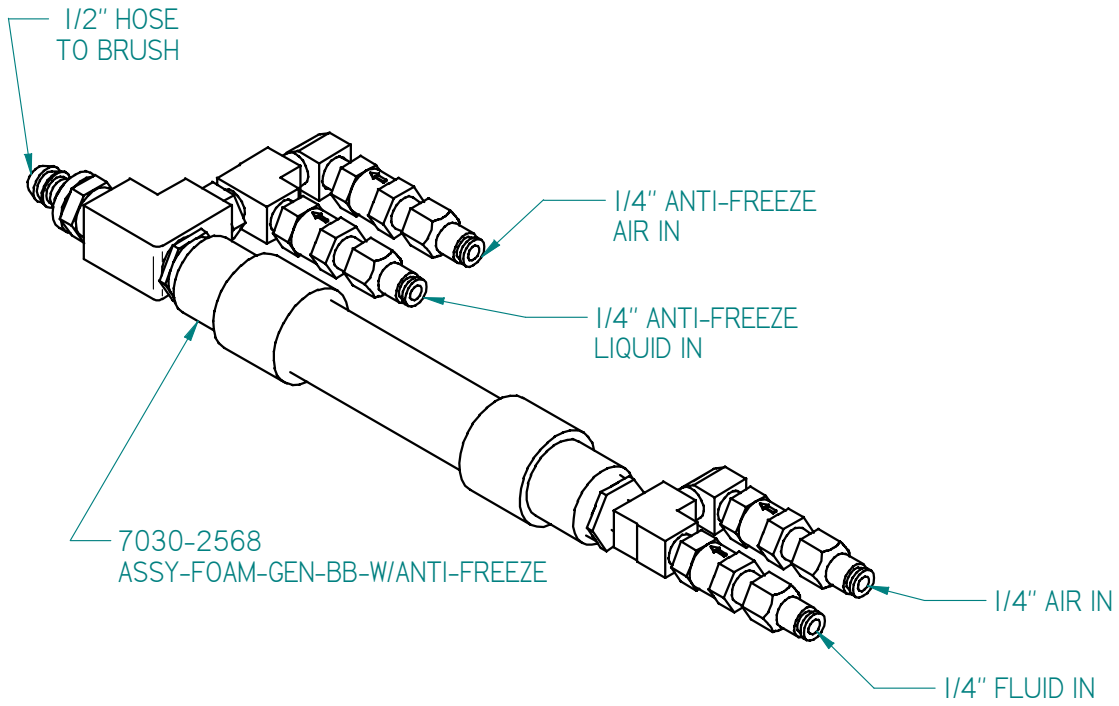

Reference drawing number 7030-2568

This illustration is of the bubble brush foam generator assembly with the antifreeze option. The generator will vary if you have air weep or no freeze protection, but you will have one generator for each brush. They are about 1'-6" in length and should be mounted in the chase above the ceiling, as close to the brush boom as possible.

Step 1. Bring the ¼" air hoses and fluid hoses from the fluid module. Antifreeze is optional. Cut to length and push into the self-locking fittings as shown. As always, be careful to insure that the ends are straight as tapered or ragged cuts can cause the seal to fail.

Step 2. Cut to length the ½" low pressure hose and attach one end to the foam generator and the other to the bubble brush boom.

Installing the Foam Conditioner Applicator

Figure 16, Foam Conditioner Applicator

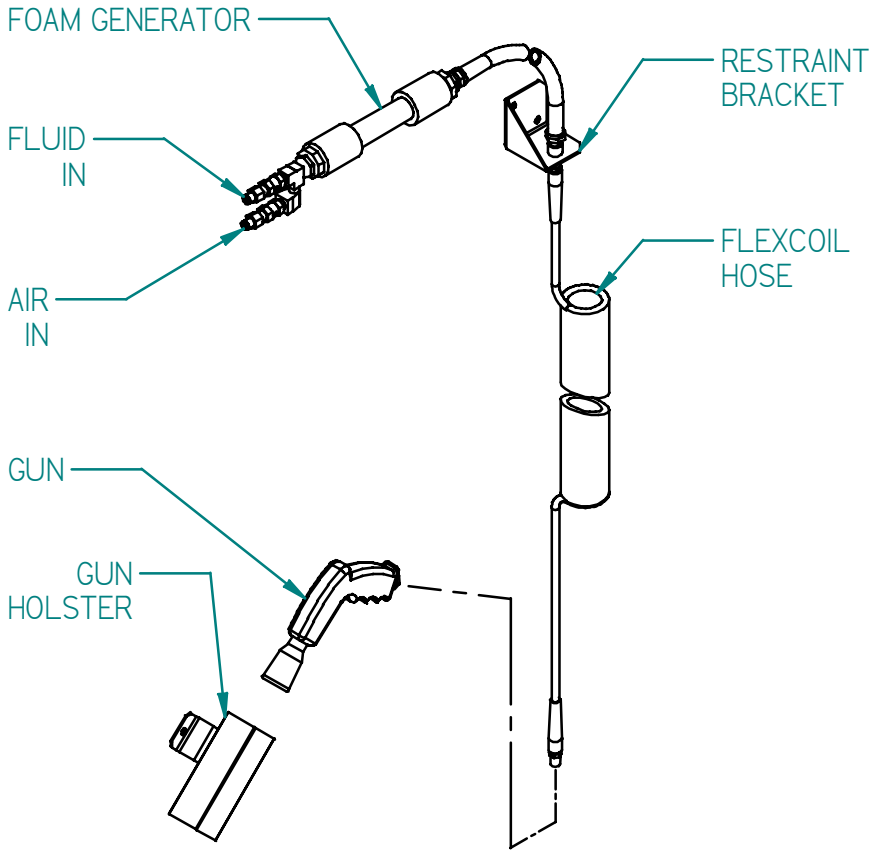

The foam conditioner applicator can be used for single or tri-color foaming conditioner. Cut a length of the ½" blue pushlock hose to run between the foam generator and the pushlock fitting at the bracket. To install, mount the bracket on the wall near one end of the bay at about 8' to 10' high, using ¼" or 5/16" screws. The gun "holster", item 1, mounts at about 3' above the floor.

Installing the Coin Box

Figure 17, AJSS Coin Box

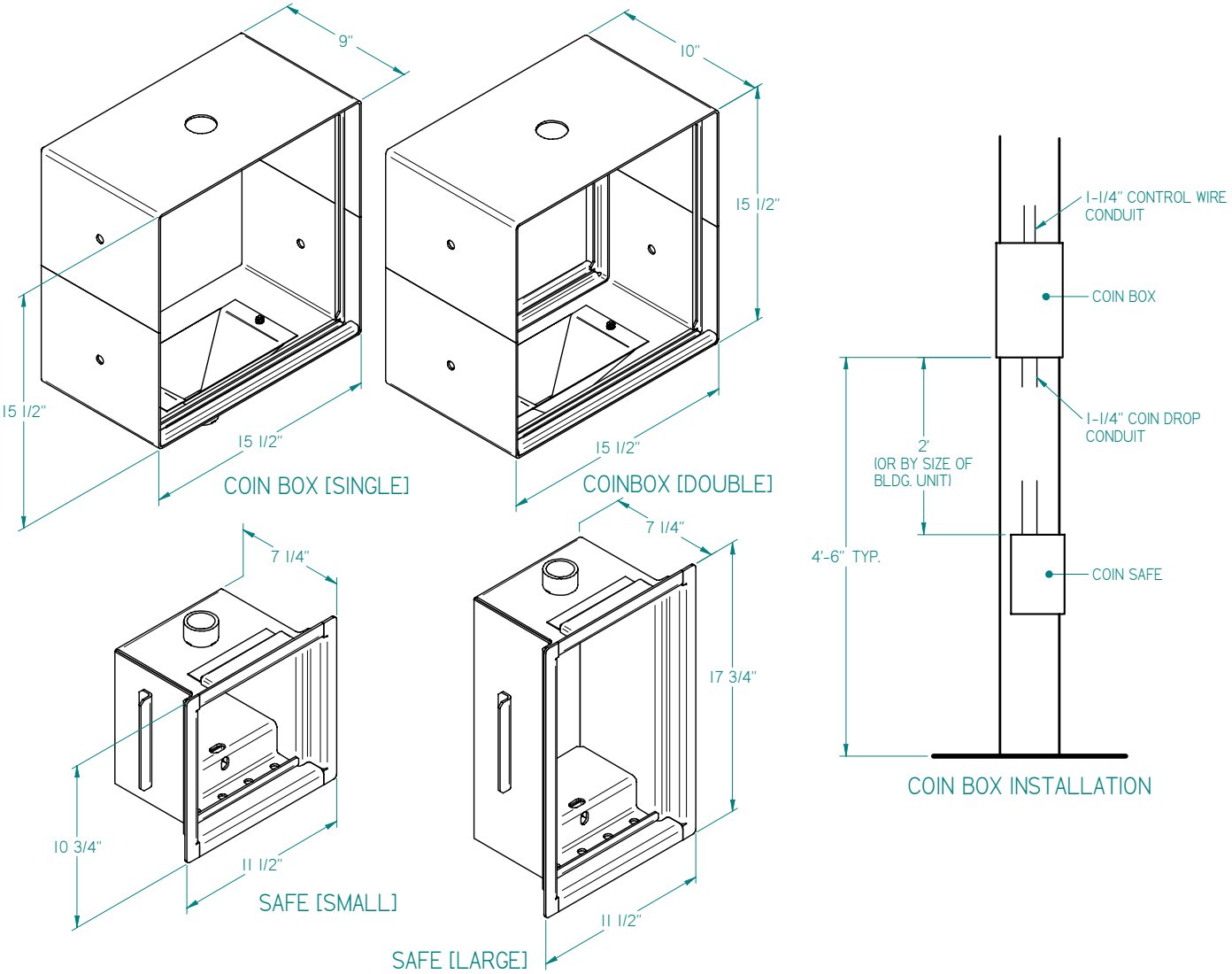

Install the coin box and safe in the wall, reinforcing as necessary for security. Run the supplied cable between the coin box and the pumping station in the equipment room, which corresponds to the bay. Use the wiring diagram to finish the connections at both ends. Coin boxes with the two faces will be wired to two pumping stations. (Both are shown without doors.)

Start-up

A. Trigger wands

Remove all trigger wands from their bay hoses.

B. Pump oil

The crankcases of the pumps have been filled at the factory. However, you must check the oil level of each pump to make sure that there has been no leakage.

C. Chemicals

A hydrominder hose from the tank of each chemical mixture is run down into the buckets of their respective chemical. These five gallon buckets should be checked every two weeks.

D. Water softener

Your water softener, if one was purchased, needs to be set up for the local conditions. Refer to the set-up/programming manual for specific instructions.

E. Underfloor heat start-up

Make sure your under floor heater is properly operated. Refer to manufacturer's instructions.

F. Water

Before turning on the water supply, ensure that all service valves are in the 'off' position. Once the incoming water line is pressurized, turn on the hot water tank and allow to fill. If there is a recirculating boiler attached, it is safe to turn it on now.

For each of the chemical tanks, install the recommended tip in the eductor tee (see chemical supplier recommendation). Then with the chemical base in the storage container, use a vacuum gun to draw each product to the closest point at the eductor tee. Re-connect the chemical line to the eductor. This will ensure that the solution is as close as possible to the desired strength, which will aid setting up in the bays. Repeat on the remaining tanks. Then, turn on the water service valve for the chemical tanks.

G. Water heater

Make sure your water heater is properly operated. Refer to manufacturer's instructions. Turn on the power to the water heater. Verify and check the "on demand" function for each pumping unit. Water temperature should be no more than 130°F.

H. Turn 'on' power

Turn on the power at circuit breakers.

I. Timers

Check to see that timers are set to the desired price and time before starting up. Read directions carefully before setting! Replace covers when through.

J. Bay check out

-1 Make sure all valves at the manifolds (behind and below the pumps) are turned full to open.

-2 If a programmable coin acceptor was selected, check programming to ensure it meets customer's requirements. Refer to instructions for specific coin acceptor. Insert quarters in the first bay's coin box with the rotary switch in the 'off' position. The green light will turn on after the minimum numbers of coins have been inserted.

-3 Turn rotary switch to "rinse", the pump should then turn on.
Note: the pump will make a lot of noise until the air has been cleared from the intake manifolds. At this time – check the rotation of the motors (3-phase only) to match the arrows cast at the tops of the pump crankcases.

-4 After the line out to the bay has been thoroughly flushed, turn the selector switch to "soap". Warm water will now flow and again, the pump will make noise due to air in the warm water manifold. After the warm water flush, turn rotary switch to "off" and replace the trigger wands back onto the bay hoses. Be sure the wands have the properly sized nozzles.

-5 From this time on, start-up will require two persons.
Turn the selector switch to "rinse" while holding the wand firmly. The high pressure will rise to the factory pre set pressure with trigger pulled on the wand.

-6 Check the pressure reading at the gauge adjacent to the high-pressure pump. Make sure that the pressure is not exceeding the limitations of the pump and motor. Note: too high of a pressure setting will cause the motor overload to trip.

-7 Have the other person squeeze and release the trigger several times to assure proper operation of the unloader valve.

-8 Make sure the Hot/Cold switch is in the hot position.

-9 With the trigger constantly being squeezed, adjust the incoming water flow to the pump by slowly closing the red-handled valve marked HOT WATER (see figure 09), until the pump starts making a loud sound, which indicates that it is starving for water. At this time, begin opening the valve until the noise goes away, then open the valve ½ of a turn more. By doing this, you have properly adjusted the incoming hot water supply to that pump.

-10 Soap:
Set the selector switch to "soap". Open the adjustment valve for soap and run until desired effect is seen at the bay. Depending on the customer's requirements, slight tip changes might have to be made at the eductor in the chemical mixing tank.

-11 Wax/Clearcoat:
Set the selector switch to “clearcoat” position. The same procedure as above is used for wax/clearcoat.

-12 Set the selector switch back to Rinse to ensure that both chemical valves close and no further product is dispensed.

-13 Low pressure products:
Each of the low-pressure products is started up in the same manner with slight difference in “tri-color” products.
Turn on the specific product and adjust pump pressure and air pressure to achieve desired delivery. On systems where the distance between the equipment room and the bays are greater, use a higher pressure on the regulators to achieve higher performance.
There is an individual needle valve adjustment on the manifold block for both solution and air, for each bay.
Once the product has been set for one function, repeat the same procedure for the remaining products.

-14 Tri-color products:
If the system has either of the two optional tri-color functions (foam brush or conditioner), there is an additional adjustment on the timer that controls the cycling of the colors. If this is set to cycle too fast, there will be extreme mixing of the colors and little or no change will occur. While adjusting, you will notice the valves overlap in changing color. This is done to provide a ‘rainbow’ effect in the bay.

-15 Once all the products are set, and performing as desired, repeat on each additional bay. This should go much faster than the beginning since the only required adjustment are individual flow adjustments.

-16 Weep:
Turn on weep system and set the temperatures so that all bays are “full on” weep. Set the weep flow rate (trigger released) to 32 oz/min (recommended). Unless other flow rates are required by weep timer manufacturer.

-17 Bubble Brush/Conditioner Gun weep:
There are two different weep systems available: Air weep, and Anti-Freeze Injection. Turn the system on to get foam into the lines going to the bay, then shut the system back off. While there is still foam in the lines, turn on the weep system. Slowly adjust the needle valve for each bay by opening (clockwise) it until the foam is pushed out the line at about 2 to 4 inches per second. Your weep system is now adjusted for the winter season.

-18 Anti-Freeze Injection start-up:
The Anti-Freeze Injection System is similar to the low-pressure functions. Set the pump pressure and air pressure regulators to approximately 45 psi. There is an individual needle valve adjustment on the solenoid manifold block for solution and air for each bay. These needle valves and the pressure regulators can be adjusted to achieve desired delivery.